POWER WINDOW (RHD)

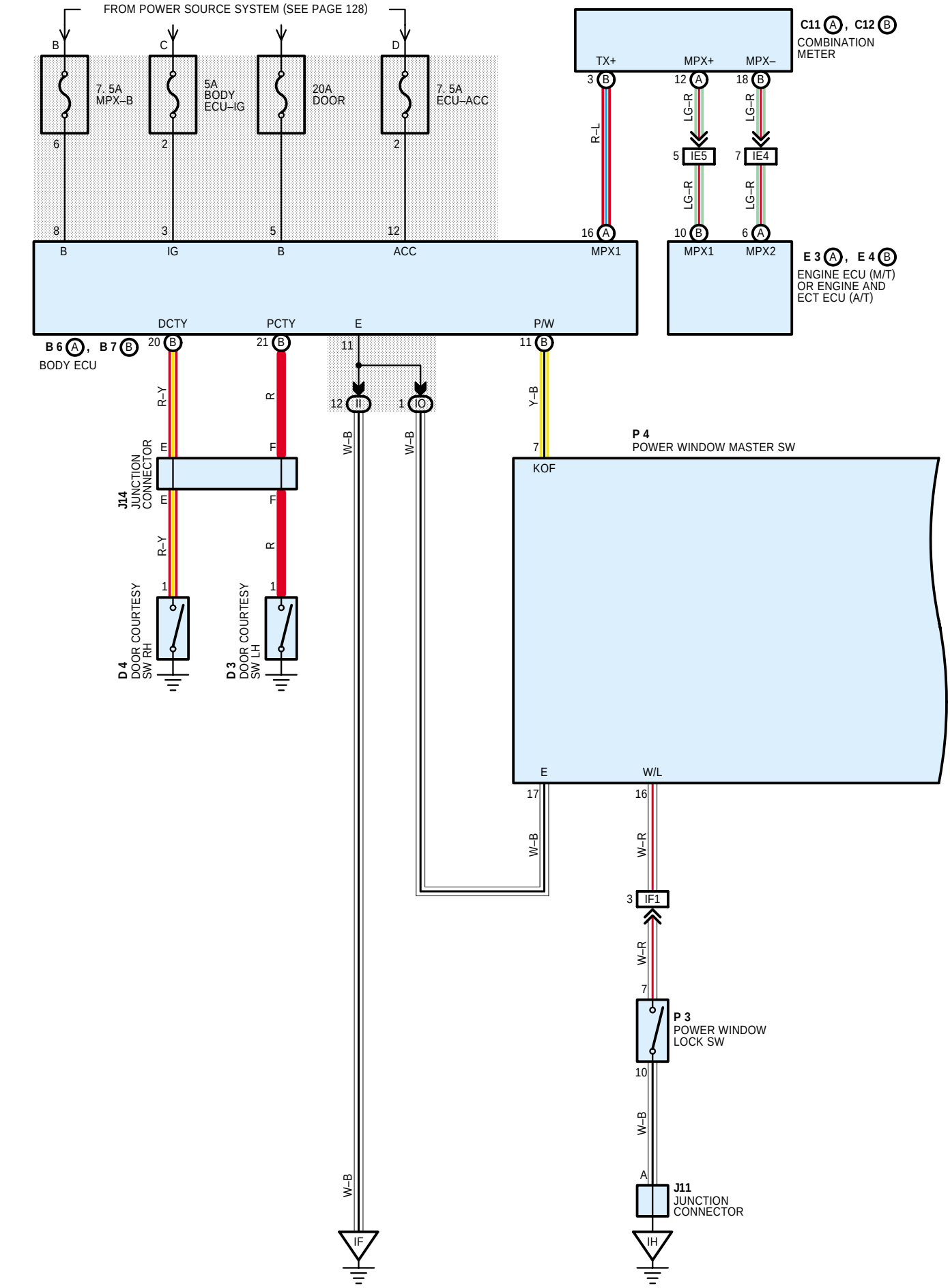

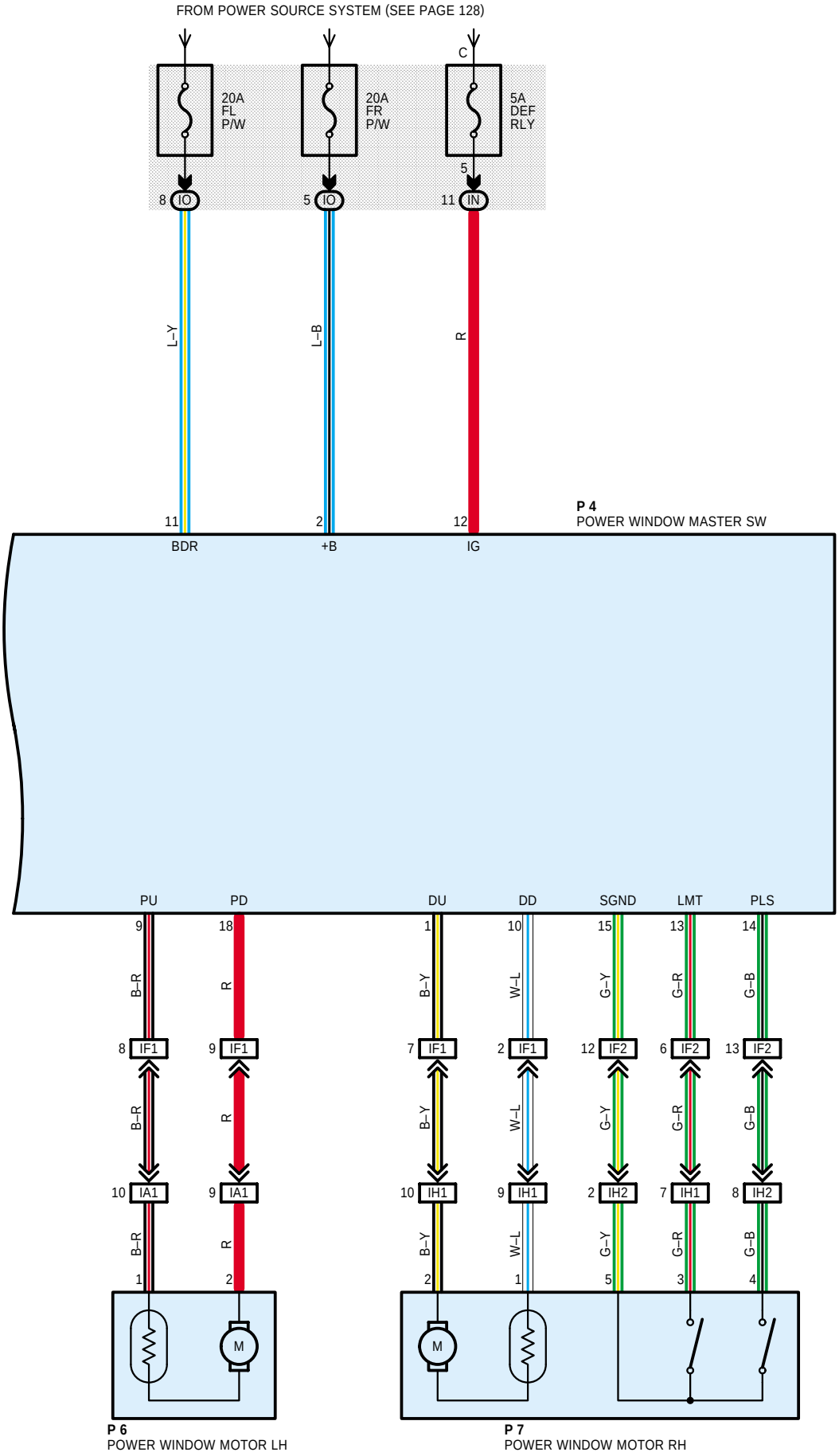
FROM POWER SOURCE SYSTEM (SEE PAGE 128)
20A
FL
P/W
20A
FR
P/W
C
5A
DEF
RLY
5
8 IO
5 IO
11 IN
L–Y
L–B
R
11
2
12
BDR
+B
IG
P 4
POWER WINDOW MASTER SW
PU
PD
DU
DD
SGND
LMT
PLS
9
18
1
10
15
13
14
B–R
R
B–Y
W–L
G–Y
G–R
G–B
8 IF1
9 IF1
7 IF1
2 IF1
12 IF2
6 IF2
13 IF2
10 IA1
9 IA1
10 IH1
9 IH1
2 IH2
7 IH1
8 IH2
1
2
2
1
5
3
4
M
M
P 6
POWER WINDOW MOTOR LH
P 7
POWER WINDOW MOTOR RH